SHENZHEN Wayeah LCD Module							KM12232C3
Option	LCD TYPE				BackLight TYPE			Controler
	TN	HTN	STN	FSTN	LED	EL	CCFL	SBN1661G
			√		√			

Mechanical data

ITEM	W x H x D	Unit
Module Size	70.0x28.6x12.5	mm
View-area	60.5 x 18.3	mm
Respective	122 x 32	dots
Dot Size	0.36 x 0.41	mm
Dot Pitch	0.40 x 0.45	mm

Absolute Maximum Raring

ITEM	Symb.	Min.	Type	Max.	Unit
Supply Voltage	VDD	3.0	5.0	5.5	V
LCD drive voltage	V0	-3.0	4.8	0	V
Input voltage	Vi	0	0.7VDD	VDD	V
Operate temp.	Top	-20	25	+70	℃
Storage temp.	Tsg	-30	25	+80	℃

EXTERNAL DIMENSIONS AND DISPLAY PATTERN

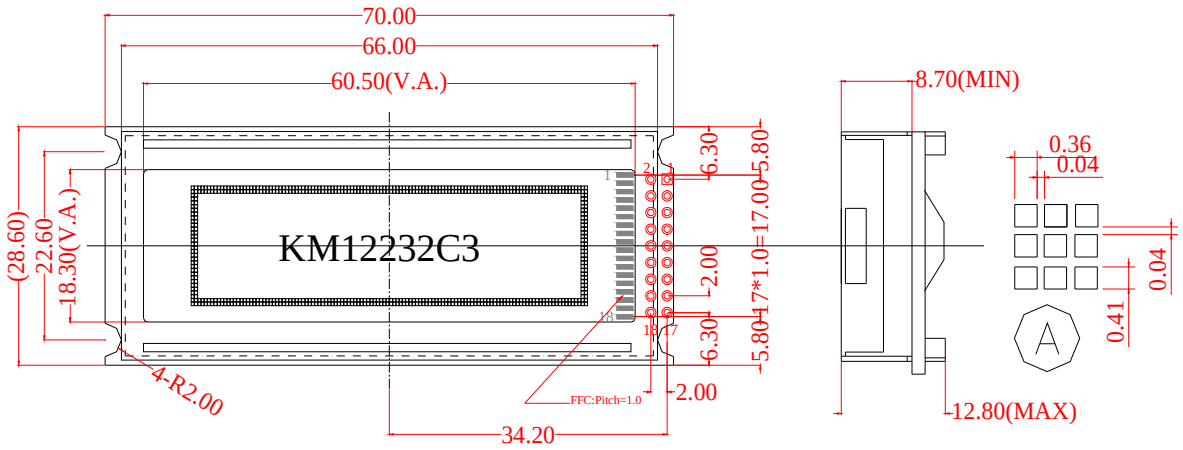

1	2	3	4	5	6	7	8	9	10	11	12	13	14	15	16	17	18
VDD	VSS	V0	RET	E1	E2	R/W	RS	DB0	DB1	DB2	DB3	DB4	DB5	DB6	DB7	BLA	BLK

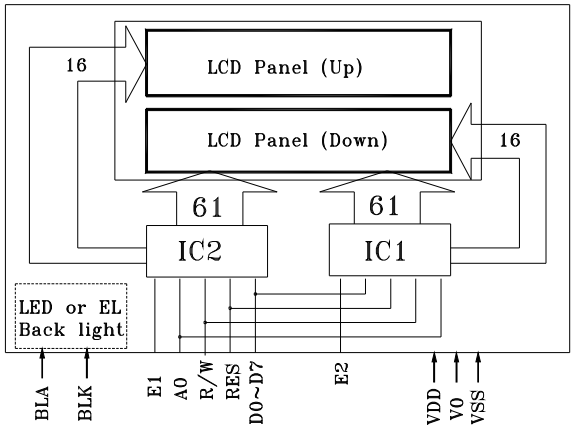

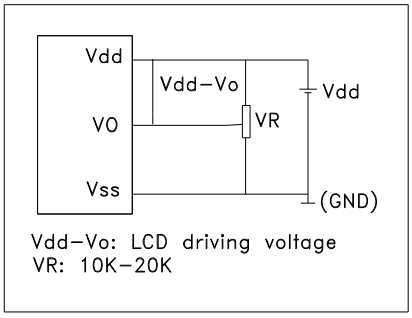

INTERFACE

NO.	NAME	NO.	NAME	NO.	NAME
1	VDD	7	R/W	13	DB4
2	VSS	8	RS	14	DB5
3	V0	9	DB0	15	DB6
4	/RET	10	DB1	16	DB7
5	E1	11	DB2	17	BLA
6	E2	12	DB3	18	BLK