SHENZHEN Wayeah LCD Module

KM12864J3

Option	LCD TYPE				BackLight TYPE			Controler
	TN	HTN	STN	FSTN	LED	EL	CCFL	
			√		√			S6B0108B

Mechanical data

ITEM	W x H x D	Unit
Module Size	93.0x70.0x13.5	mm
View-area	72.0 x 40.0	mm
Respective	128 x 64	dots
Dot Size	0.48 x 0.48	mm
Dot Pitch	0.52 x 0.52	mm

Absolute Maximum Raring

ITEM	Symb.	Min.	Type	Max.	Unit
Supply Voltage	VDD	3.0	5.0	5.5	V
LCD drive voltage	V0	-	-	15V	V
Input voltage	Vi	0	0.7VDD	VDD	V
Operate temp.	Top	-20	25	+70	℃
Storage temp.	Tsg	-30	25	+80	℃

EXTERNAL DIMENSIONS AND DISPLAY PATTERN

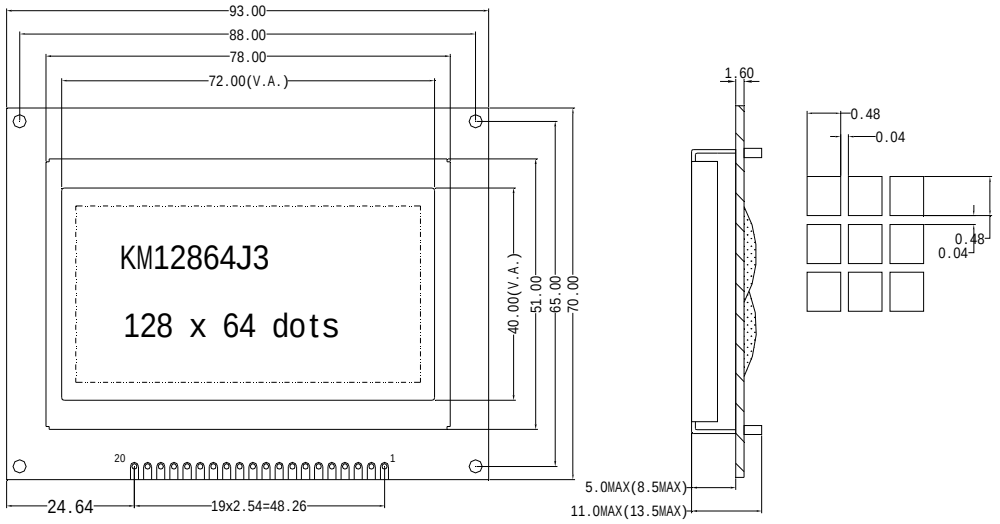

1	2	3	4	5	6	7	8	9	10	11	12	13	14	15	16	17	18	19	20
VSS	VDD	V0	A0	R/W	E	DB0	DB1	DB2	DB3	DB4	DB5	DB6	DB7	CS1	CS2	RET	VEE	BLA	BLK

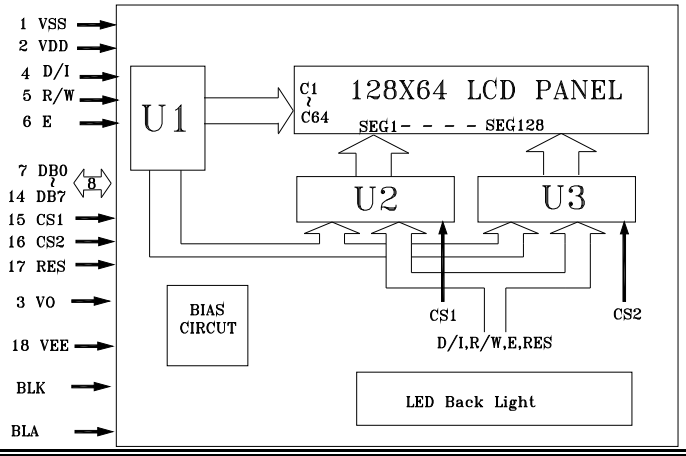

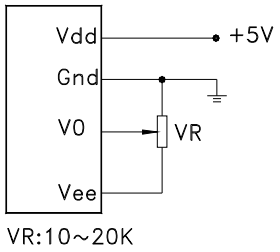

INTERFACE

NO.	NAME	NO.	NAME	NO.	NAME	NO.	NAME
1	VSS	7	DB0	13	DB6	19	BLA
2	VDD	8	DB1	14	DB7	20	BLK
3	V0	9	DB2	15	CS1		
4	RS	10	DB3	16	CS2		
5	R/W	11	DB4	17	RET		
6	E	12	DB5	18	VEE		